CLASSIC COMMERCIAL VEHICLES

DELIVER GOODS ALL OVER THE WORLD

UAZ
BUSINESS

CONTENTS

ALL-NEW INTERIOR **4–5**

IMPROVED DESIGN **6–7**

NEW OPTIONS **8**

ENGINE **9**

OFF-ROAD CAPABILITY **10–11**

CHASSIS **12–13**

EXPEDITION **14–15**

DROPSIDE TRUCK WITH CANVAS TOP **16–17**

FARMER **18–19**

COMBI **20–21**

GLASSED VAN **22–23**

BUS **24–25**

VAN CARGO **26–27**

COMMERCIAL CARGO BOX TRUCK **28-29**

CLASSIC COMMERCIAL VEHICLES

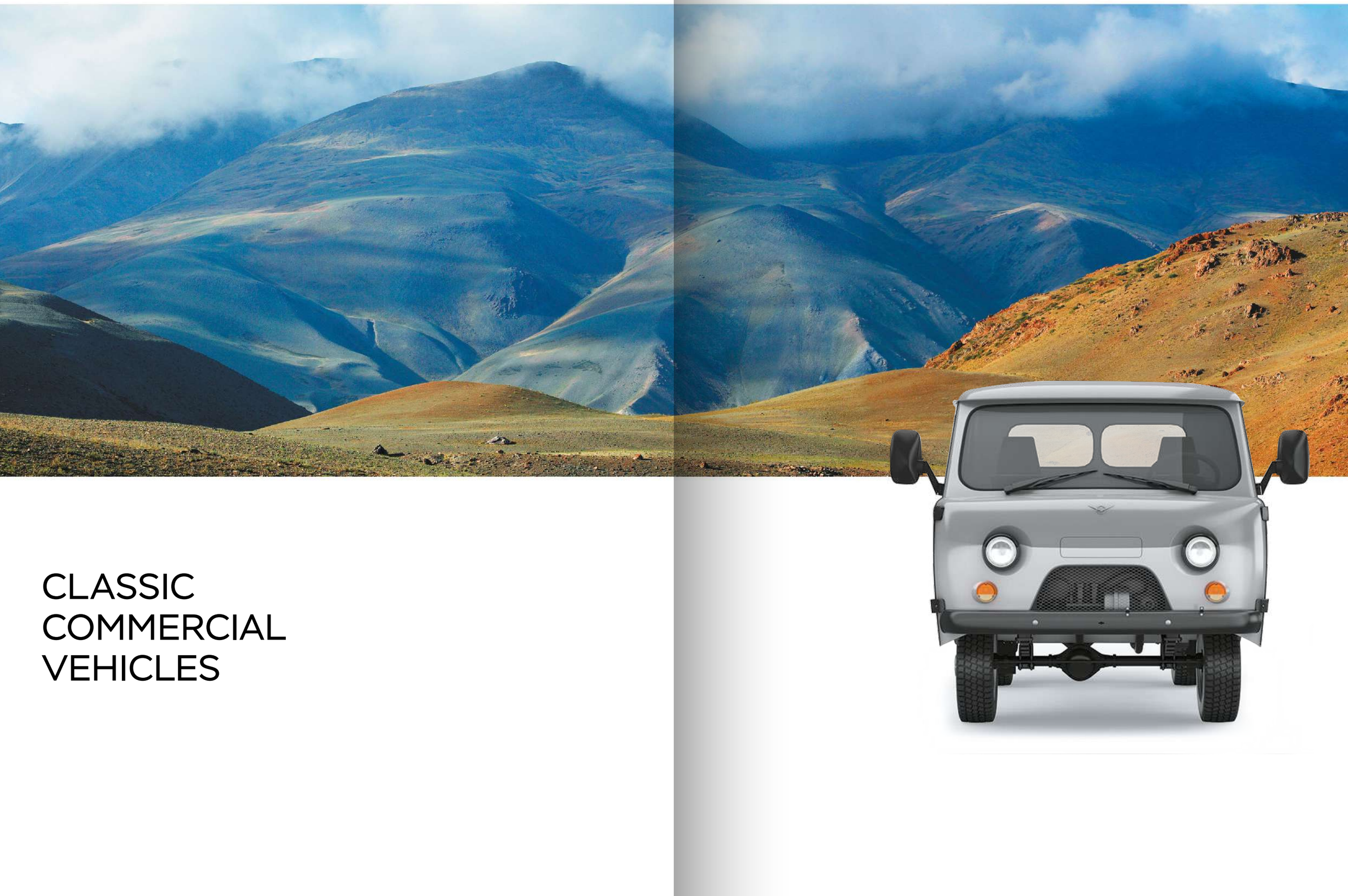

ALL-NEW INTERIOR

IMPROVED COMFORT AND FUNCTIONAL CAPABILITIES

Interior comes with a single information dashboard and upgraded ergonomic layout of buttons. There are seat heater buttons, ON/OFF switches for hazard warning lights and a place for a car stereo (1DIN), 12V socket, and a glove box.

A new steering wheel, with multifunction under-steering switches, is installed on dropside trucks of the UAZ light commercial line-up. Vehicles are equipped with new ergonomic seats, that are adjustable in the longitudinal direction, providing comfortable driving positions for drivers with any body type.

New adjustable seat

“Soft” steering wheel.
Multifunctional Under-steering Switches

Proper place for car stereo

Spacious glove box

Dashboard and 12V socket

IMPROVED DESIGN

IMPROVED STRUCTURAL RIGIDITY,
DUE TO REINFORCED BODY FRAME
AND SUPPORTS

Stronger frame

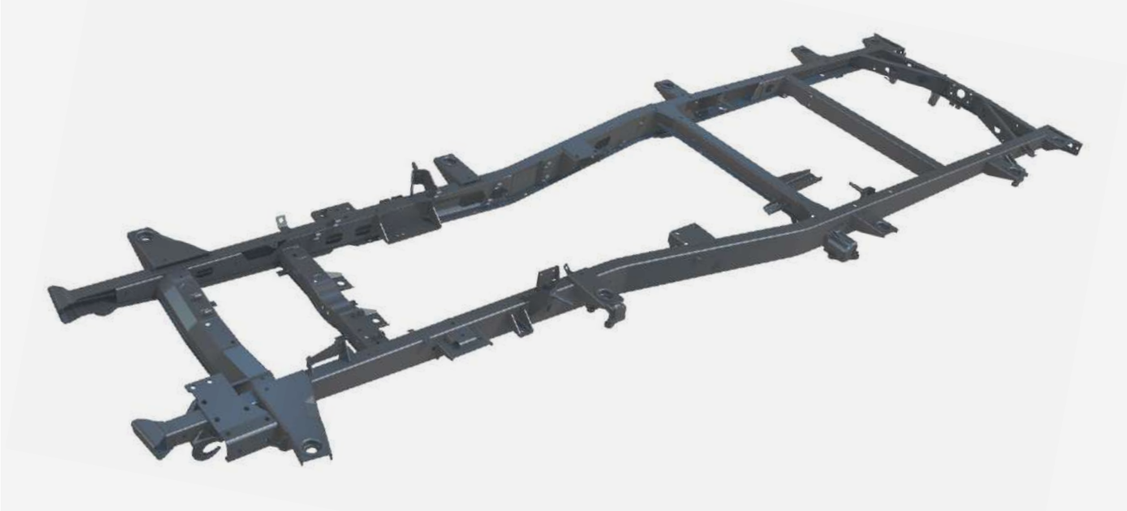

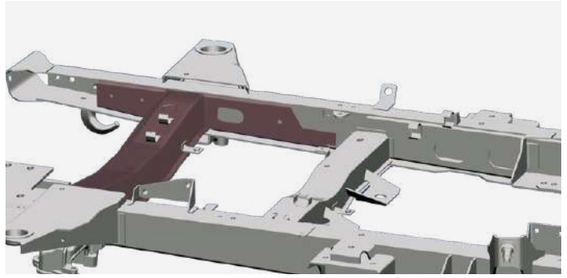

Increased cross-arm thickness

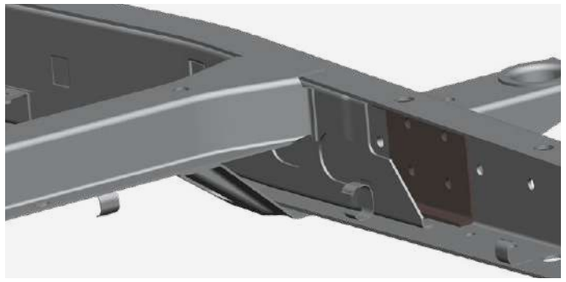

Auxiliary spars

Improved vibration and acoustic comfort

Due to improved engine noise insulation and body noise and vibration insulation, a more comfortable environment within the vehicle has been achieved. Noise insulation with pile surface covering improves acoustic comfort and interior cabin decor.

Roof liner needled fabric

Improved vibration and noise insulation package all over the body, and special body-mounted pads

NEW OPTIONS

Comfort package

-The UAZ commercial vehicle obtained even more comfort with new options:
- External door handles with a unified key with an ignition switch
- Rear door lock with the possibility of opening from the inside when the lock is closed with a key
- Sliding windows of the interior*

* - not available for cars with a two-seat cabin

Differential lock of rear axle (EATON)*

Differential lock allows a rigid link to be established between wheels of the same axle, that prevents stoppage of one running wheel when the second one is slipping. Thus off-road capability of a vehicle improves, enabling it to pass through difficult places, when a vehicle stops due to slipping of one or two wheels on different axles. The differential lock is controlled by a special button in the cabin of the vehicle.

* available only with Spicer axles

ENGINE

OPTIMAL COMBINATION OF POWER AND TORQUE PROVIDES MAXIMUM PERFORMANCE AND FUEL EFFICIENCY

ZMZ-40911 IS A MODERN PETROL ENGINE

Compliance with Euro 5 emission standards

Confident start at extremely low temperatures

Fast engine warm up

Ability to install a pre-heater

Availability of spare parts across Russia

Efficient functioning, regardless of fuel quality

High responsiveness (optimum balance of torque and power)

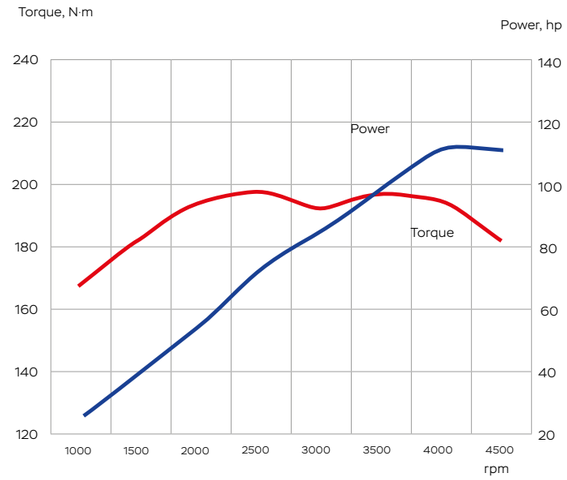

TECHNICAL DATA

Engine capacity, cm³	2,693
Maximum power, HP:	112,2
Maximum torque, N·m at 2,500 rpm	198

OFF-ROAD CAPABILITY

SWITCHABLE CLASSIC ALL-WHEEL DRIVE
TYPE PART-TIME

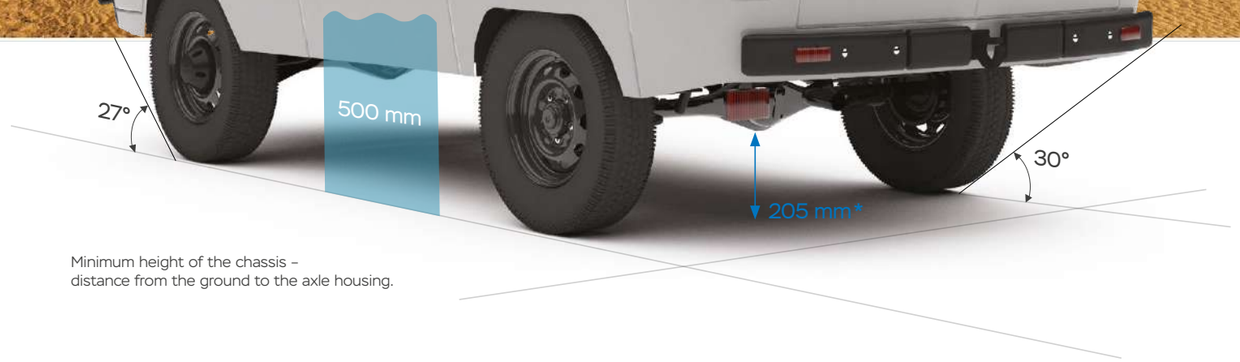

Minimum height of the chassis – distance from the ground to the axle housing.

TECHNICAL DATA

Wading depth, mm	500
Angle of departure	27°
Angle of approach	30°
Road clearance, mm	205

Enables selecting between unique off-road characteristics and economical operation. Thanks to the Part-Time 4WD system, you can change transmission operation modes.

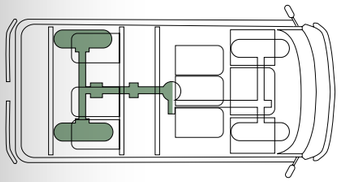

2H REAR-WHEEL DRIVE

Ensures fuel economy, as 100% of the torque is transmitted to the rear axle

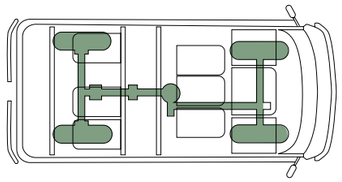

4H ALL-WHEEL DRIVE

Rigid connection of the front axle. The torque is distributed between the front and rear shafts 50:50. Used when moving on slippery surfaces or off-road

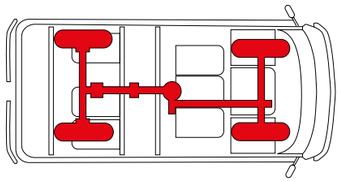

4L ALL-WHEEL DRIVE AND LOWER GEAR RANGE

This ensures the maximum traction and can be used when driving in difficult off-road environment

CHASSIS

CLASSIC TRUCK CHASSIS CAB ALLOWS MOUNTING PRACTICALLY ANY SUPERSTRUCTURE, WHILE THE LOWEST PRICE IN ITS CLASS CONTRIBUTES TO REDUCTION OF COSTS, AND BOOSTS THE PROFITABILITY OF YOUR BUSINESS

TECHNICAL DATA

Wheel arrangement	4×4
Number of seats	2
Length, mm	4,430
Width, mm	1,940
Height, mm	2,064
Wheelbase, mm	2,550
Road clearance, mm	205
Wading depth, mm	500
Curb weight, kg	1,600
Gross weight, kg	3,070

EXPEDITION

UAZ SGR EXPEDITION SPECIAL VERSION HAS BEEN CREATED ON THE BASIS OF A 7-SEAT UAZ COMBI WITH DIFFERENTIAL LOCK. DISTINCTIVE FEATURES OF THE SPECIAL VERSION EXTERIOR ARE:

- PROTECTIVE OR ORANGE COLOR BODY PAINT
- BLACK STAMPED RIMS WITH BLACK CAPS
- BFGOODRICH ALL-TERRAIN 225/75 R16 TIRES
- FRONT POWER BUMPER WITH BULLBAR AND WINCH PLATFORM
- REAR POWER BUMPER WITH SPARE WHEEL BRACKET
- TOW BAR
- WINCH
- EXPEDITION RACK ON THE ROOF
- LADDER ON THE BACK DOOR AND NEW TYPE DOOR HANDLES
- STEERING RODS PROTECTION

SPECIAL VERSION AESTHETICS IS EMPHASIZED BY THE WHITE CONTRAST STITCHING OF SEATS WITH A WATER-REPELLENT FABRIC LINING. THE BASIC VERSION OF VEHICLE SYSTEM FEATURES THE FRONT SEAT HEATING OPTION AND A «COMFORT» PACKAGE.

DROPSIDE TRUCK WITH CANVAS TOP

DROPSIDE TRUCK IS A REAL "WORKHORSE", CAPABLE OF PRACTICALLY EVERYTHING

TECHNICAL DATA

BODY	
Wheel arrangement	4×4
Number of seats	2
Length, mm	4,501
Width, mm (platform)	1,990
Height, mm	2,355
Wheelbase, mm	2,550
Road clearance, mm	205
Wading depth, mm	500
Curb weight, kg	1,845
Gross weight, kg	3,070
Load-carrying capacity, kg	1,225
ENGINE	
Engine	Gasoline ZMZ-40911
Fuel	gasoline, not less than 92 octane
Cubic capacity, L	2,693
Maximum power, hp (kW)	112,2 (82,5) at 4,250 rpm
Maximum torque, N·m	198 at 2,500 rpm
Maximum speed, km/h	115
Fuel consumption, L/100 km (at 80 km/h)	12,4
Fuel tank capacity, l	50
CHASSIS	
Gearbox	5-speed manual
Transfer case	2-speed with switchable front axle drive
Brake system	dual circuit, vacuum assisted, front brakes—disc type, rear brakes—drum-type
Tires	225/75 R16

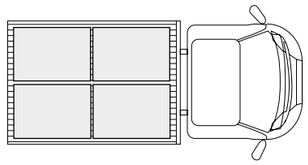

4 europallets fit easily (dimensions 800 × 1,200 mm)

FARMER

FARMER IS THE IDEAL VEHICLE FOR BUSINESS AND FAMILY NEEDS, COMBINING A SPACIOUS BODY AND PASSENGER CABIN WITH 5 SEATS

Additional cabin heater

TECHNICAL DATA

BODY	
Wheel arrangement	4×4
Number of seats	5
Length, mm	4,847
Width, mm (platform)	1,990
Height, mm	2,355
Wheelbase, mm	2,550
Road clearance, mm	205
Wading depth, mm	500
Curb weight, kg	1,995
Gross weight, kg	3,070
Load-carrying capacity, kg	1,075
ENGINE	
Engine	Gasoline ZMZ-40911
Fuel	gasoline, not less than 92 octane
Cubic capacity, L	2,693
Maximum power, hp (kW)	112,2 (82,5) at 4,250 rpm
Maximum torque, N·m	198 at 2,500 rpm
Maximum speed, km/h	115
Fuel consumption, L/100 km (at 80 km/h)	12,4
Fuel tank capacity, l	50
CHASSIS	
Gearbox	5-speed manual
Transfer case	two-speed with switchable front drive axle
Brake system	dual circuit, vacuum assisted, front brakes—disc type, rear brakes—drum-type
Tires	225/75 R16

COMBI

COMBI ALLOWS ACCOMMODATING IN ONE VEHICLE A DRIVER, SIX PASSENGERS AND FOUR HUNDRED FIFTY KILOGRAMS OF CARGO IN AN ISOLATED COMPARTMENT

TECHNICAL DATA

BODY	
Wheel arrangement	4×4
Number of seats	5/7
Length, mm	4,390
Width, mm (platform)	1,940
Height, mm	2,064
Wheelbase, mm	2,300
Road clearance, mm	205
Wading depth, mm	500
Curb weight, kg	1,890/1,920
Gross weight, kg	2,830
Load-carrying capacity, kg	940/910
ENGINE	
Engine	Gasoline ZMZ-40911
Fuel	gasoline, not less than 92 octane
Cubic capacity, L	2,693
Maximum power, hp (kW)	112,2 (82,5) at 4,250 rpm
Maximum torque, N·m	198 at 2,500 rpm
Maximum speed, km/h	127
Fuel consumption, L/100 km (at 80 km/h)	11,2
Fuel tank capacity, l	50+27
CHASSIS	
Gearbox	5-speed manual
Transfer case	two-speed with switchable front drive axle
Brake system	dual circuit, vacuum assisted, front brakes—disc type, rear brakes—drum-type
Tires	225/75 R16

Rear double wing doors and reduced loading height ensure easy access to the cargo compartment

Passenger cabin with isolated cargo compartment allows comfortably accommodating up to five passengers

GLASSED VAN

GLASSED VAN IS PERFECTLY DESIGNED BOTH FOR CITY AND COUNTRYSIDE DRIVING

Possibility to transport oversize cargo

TECHNICAL DATA

BODY	
Wheel arrangement	4×4
Number of seats	2/5
Length, mm	4,390
Width, mm	1,940
Height, mm	2,064
Wheelbase, mm	2,300
Road clearance, mm	205
Wading depth, mm	500
Curb weight, kg	1,920
Gross weight, kg	2,845
Load-carrying capacity, kg	925
ENGINE	
Engine	Gasoline ZMZ-40911
Fuel	gasoline, not less than 92 octane
Cubic capacity, L	2,693
Maximum power, hp (kW)	112,2 (82,5) at 4,250 rpm
Maximum torque, N·m	198 at 2,500 rpm
Maximum speed, km/h	127
Fuel consumption, L/100 km (at 80 km/h)	11,2
Fuel tank capacity, l	50+27
CHASSIS	
Gearbox	5-speed manual
Transfer case	two-speed with switchable front drive axle
Brake system	dual circuit, vacuum assisted, front brakes—disc type, rear brakes—drum-type
Tires	225/75 R16

BUS

CLASSIC MINIBUS FOR EVERY OCCASION
IS INDISPENSABLE IN ANY AREA

Nine-seat passenger cabin layout comes with fold-away table

10-seat cabin features optimal use of space

Comfortable seats with seatbelts

TECHNICAL DATA

BODY	
Wheel arrangement	4×4
Number of seats	9/10
Length, mm	4,963
Width, mm	1,940
Height, mm	2,064
Wheelbase, mm	2,300
Road clearance, mm	205
Wading depth, mm	500
Curb weight, kg	2,005/2,015
Gross weight, kg	2,880
Load-carrying capacity, kg	875/865
ENGINE	
Engine	Gasoline ZMZ-40911
Fuel	gasoline, not less than 92 octane
Cubic capacity, L	2,693
Maximum power, hp (kW)	112,2 (82,5) at 4,250 rpm
Maximum torque, N·m	198 at 2,500 rpm
Maximum speed, km/h	127
Fuel consumption, L/100 km (at 80 km/h)	11,2
Fuel tank capacity, l	50+27
CHASSIS	
Gearbox	5-speed manual
Transfer case	2-speed with switchable front axle drive
Brake system	dual circuit, vacuum assisted, front brakes—disc type, rear brakes—drum-type
Tires	225/75 R16

VAN CARGO

THE CARGO VAN
IS GREAT FOR WORKING IN THE CITY
AND RURAL AREAS

TECHNICAL DATA

BODY	
Wheel arrangement	4×4
Number of seats	2/5
Length, mm	4390
Width, mm	1940
Height, mm	2064
Wheelbase, mm	2300
Road clearance, mm	205
Wading depth, mm	500
Curb weight, kg	1805/1920
Gross weight, kg	2730/2845
Load-carrying capacity, kg	925
ENGINE	
Engine	Gasoline ZMZ-40911
Fuel	gasoline, not less than 92 octane
Cubic capacity, L	2,693
Maximum power, hp (kW)	112,2 (82,5) at 4,250 rpm
Maximum torque, N·m	198 at 2,500 rpm
Maximum speed, km/h	127
Fuel consumption, L/100 km (at 80 km/h)	11,2
Fuel tank capacity, l	50+27
CHASSIS	
Gearbox	5-speed manual
Transfer case	2-speed with switchable front axle drive
Brake system	dual circuit, vacuum assisted, front brakes—disc type, rear brakes—drum-type
Tires	225/75 R16

COMMERCIAL CARGO BOX TRUCK

DIFFERENT TYPES OF LCV ARE DESIGNED TO CARRY CARGO WITH SPECIAL STORAGE AND TRANSPORTATION REQUIREMENTS

TECHNICAL DATA

GEOMETRY AND MASS	
Number of seats	2
Length, mm	4,465
Width, mm (platform)	1,940
Height, mm	2,487
Wheelbase, mm	2,550
Front/rear track, mm	1,465/1,465
Road clearance, mm	205
Wading depth, mm	500
Curb weight, kg	1,866
Gross weight, kg	3,070
Load-carrying capacity, kg	1,204
ENGINE AND TRANSMISSION	
Engine	gasoline engine
Fuel	gasoline, not less than 92 octane
Cubic capacity, L	2,693
Maximum power, hp (kW)	112,2 (82,5) at 4,250 rpm
Maximum torque, N·m	198 at 2,500 rpm
Total fuel tank capacity, l	50
Wheel arrangement	4×4
Gearbox	five-speed, manual
Transfer case	two-speed with switchable front drive axle
Drive	constant rear wheel drive with rigid part-time front wheel drive
SUSPENSION, BRAKES AND TIRES	
Front brakes	disk type
Rear brakes	drum-type
Front suspension	suspension on longitudinal semi-elliptic leaf springs with hydraulic telescopic shock-absorbers
Rear suspension	suspension on longitudinal semi-elliptic leaf springs with hydraulic telescopic shock-absorbers
Tires	225/75 R16

This version is designed both for commercial transportation of grocery products and manufactured goods

This vehicle is ideally suited for transportation of bakery products

Multipurpose van can be used to transport work crews and special equipment

TECHNICAL SPECIFICATIONS

VEHICLE MODEL	UAZ CCV				
	220695/220695-04	374195 / 374195-05	390995 / 309095-04	390945	330365
Cabin	Bus	Cargo van	Combi	Double cabin with truck flat body	Single cabin with truck flat body
Number of seats, including the driver's seat, person	8+1 / 9+1	2 / 5	5 / 7	5	2
Weight and dimensions					
Curb weight, kg	2005 / 2015	1805 / 1920	1890 / 1920	1995	1845
Total weight, kg	2880	2730 / 2845	2830	3070	
Overall length, mm	4 363	4 390		4 847	4 501
Overall width, mm	1940 up to the cab /2170 up to the mirrors			1990 up to the platform / 2170 up to the mirrors	
Overall height: mm	2 064			2355 up to the vehicle cover	
Wheelbase, mm	2 300			2 550	
Characteristics					
Filling volume of the fuel tank, l	50+27			50	
Fuel consumption when driving at a constant speed of 80 km/h, l	11,2			12,4	
Maximum speed, km/h	127			115	
Turning radius (along the axis of the front outer wheel), m	6,3			7,0	
Angle of approach / Angle of departure, deg.	30 / 27			30 / 26	30 / 29
Cargo compartment					
Internal dimensions of cargo compartment / platform (length / width / height), mm	-	2733/1818/1325	1300-840*7seats/ 1818/1325	2040/1870/ 400-1400*vehicle cover	2040/1870/ 400-1400*vehicle cover
Area of cargo compartment, platform, m^2	-	4,96	2,3/ 1,5	3,83	5,01
Volume of cargo compartment, platform, m^3	-	6,5	3,1/2,0	5,37	7,02

For the purchase and maintenance of UAZ vehicles,
please contact the official dealers in your region.

UAZ.GLOBAL

For buying and maintenance of UAZ vehicles, consult official dealers in your region. The contents of this booklet are meant only for advertising purposes. The colors of the body and finishing of the cabin shown in this booklet can differ slightly from the real colors, because of printing color limitations. The pictures may show accessories and elements of an extended configuration, which are not included in the basic configuration. Some equipment can differ depending on the sales market. The company reserves the right to change the technical characteristics and configurations mentioned in this booklet without prior notice.